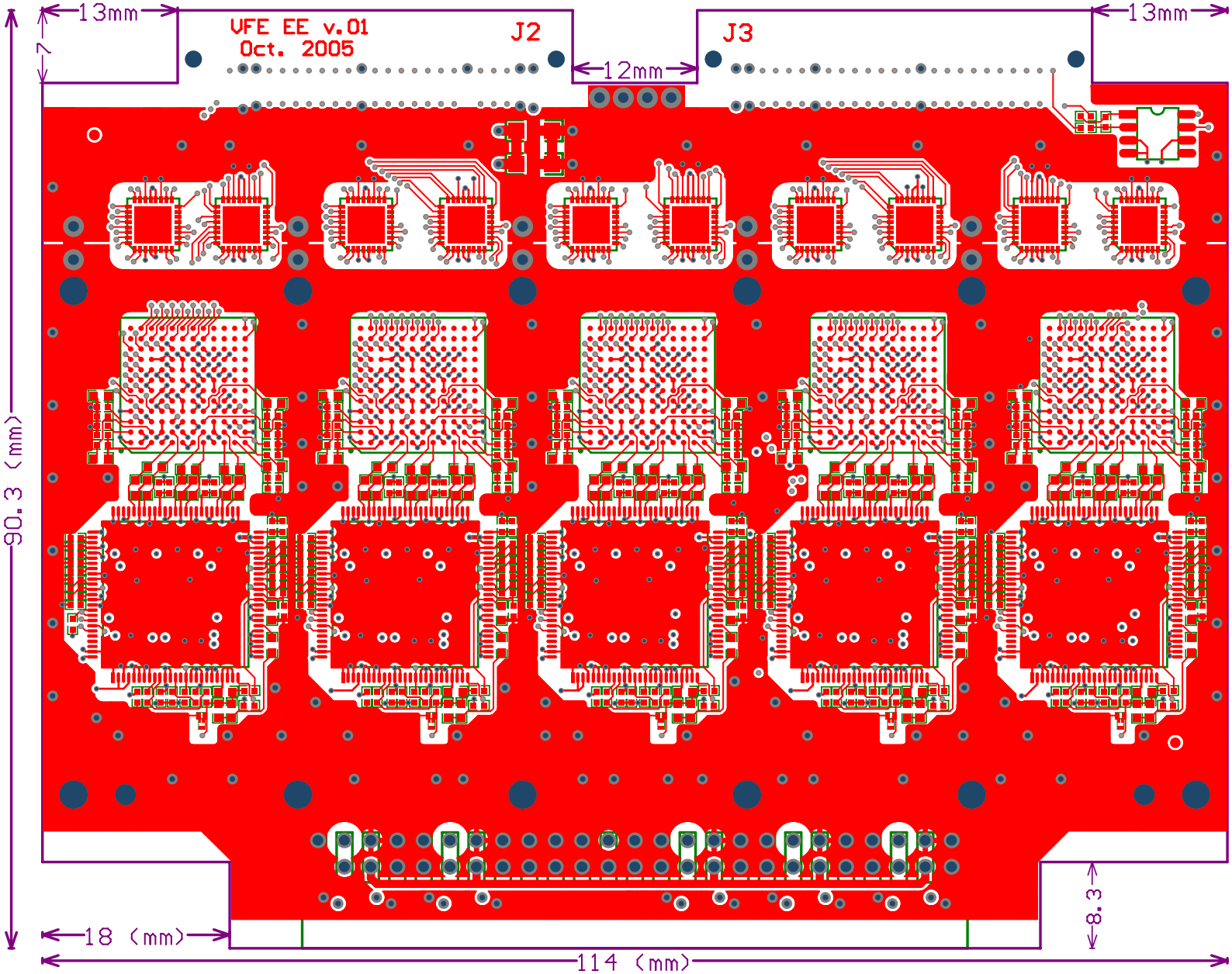
13mm
7
VFE EE v.01
Oct. 2005
J2
12mm
J3
13mm
90.3 (mm)
18 (mm)
114 (mm)
8.3

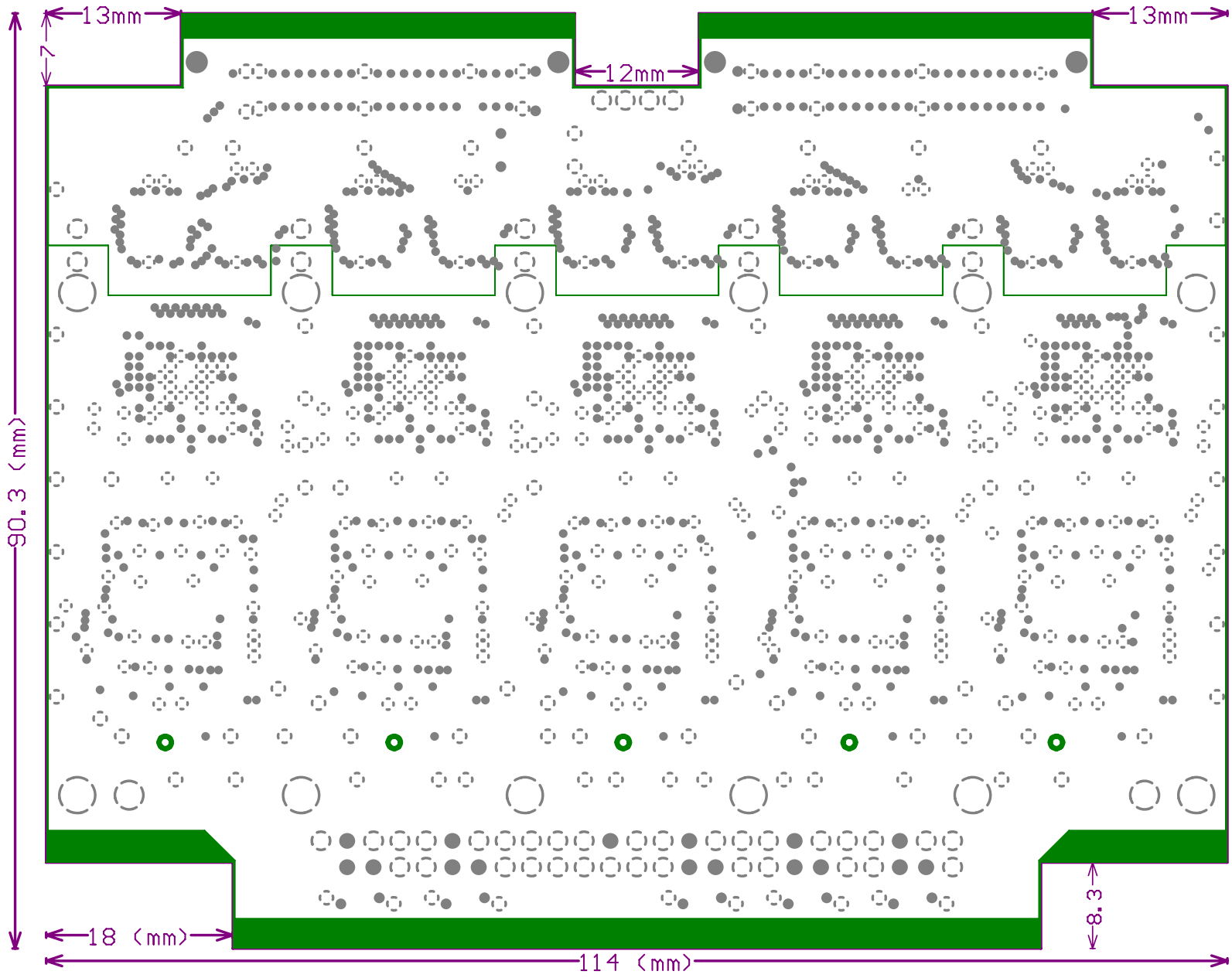
13mm
13mm
7
12mm
90.3 (mm)
8.3
18 (mm)
114 (mm)

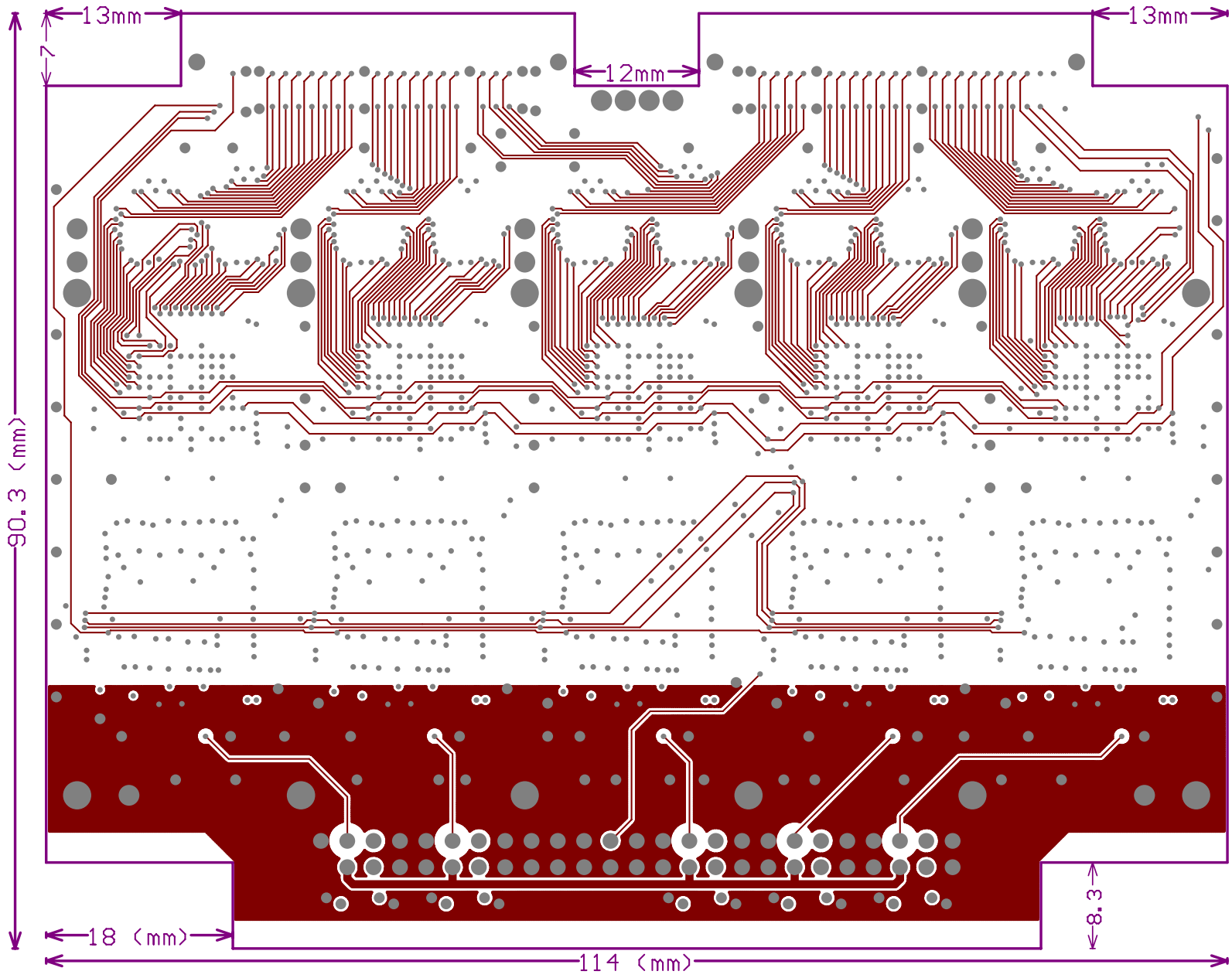
13mm
13mm
7
12mm
90.3 (mm)
8.3
18 (mm)
114 (mm)

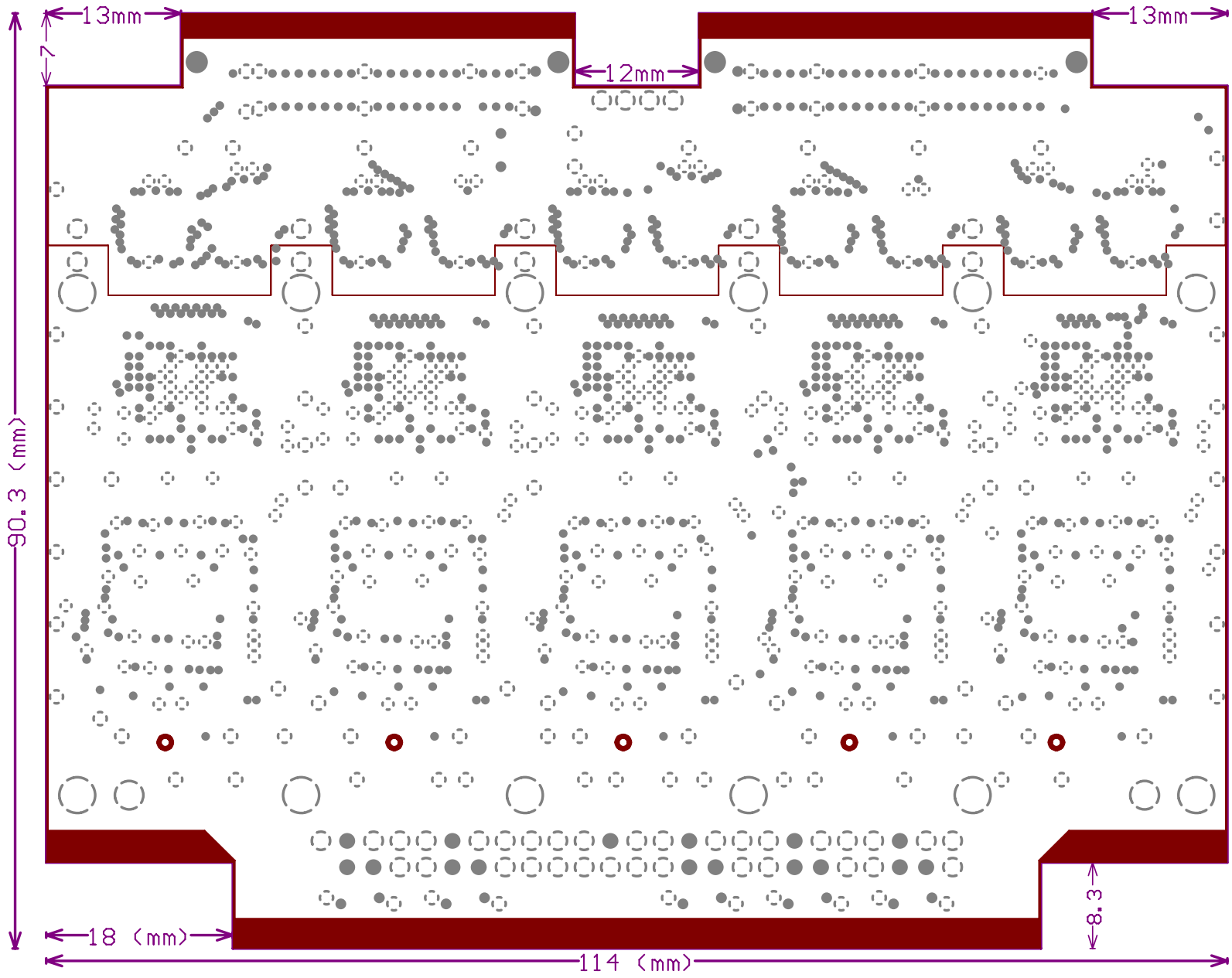
13mm
13mm
7
12mm
90.3 (mm)
18 (mm)
114 (mm)
8.3

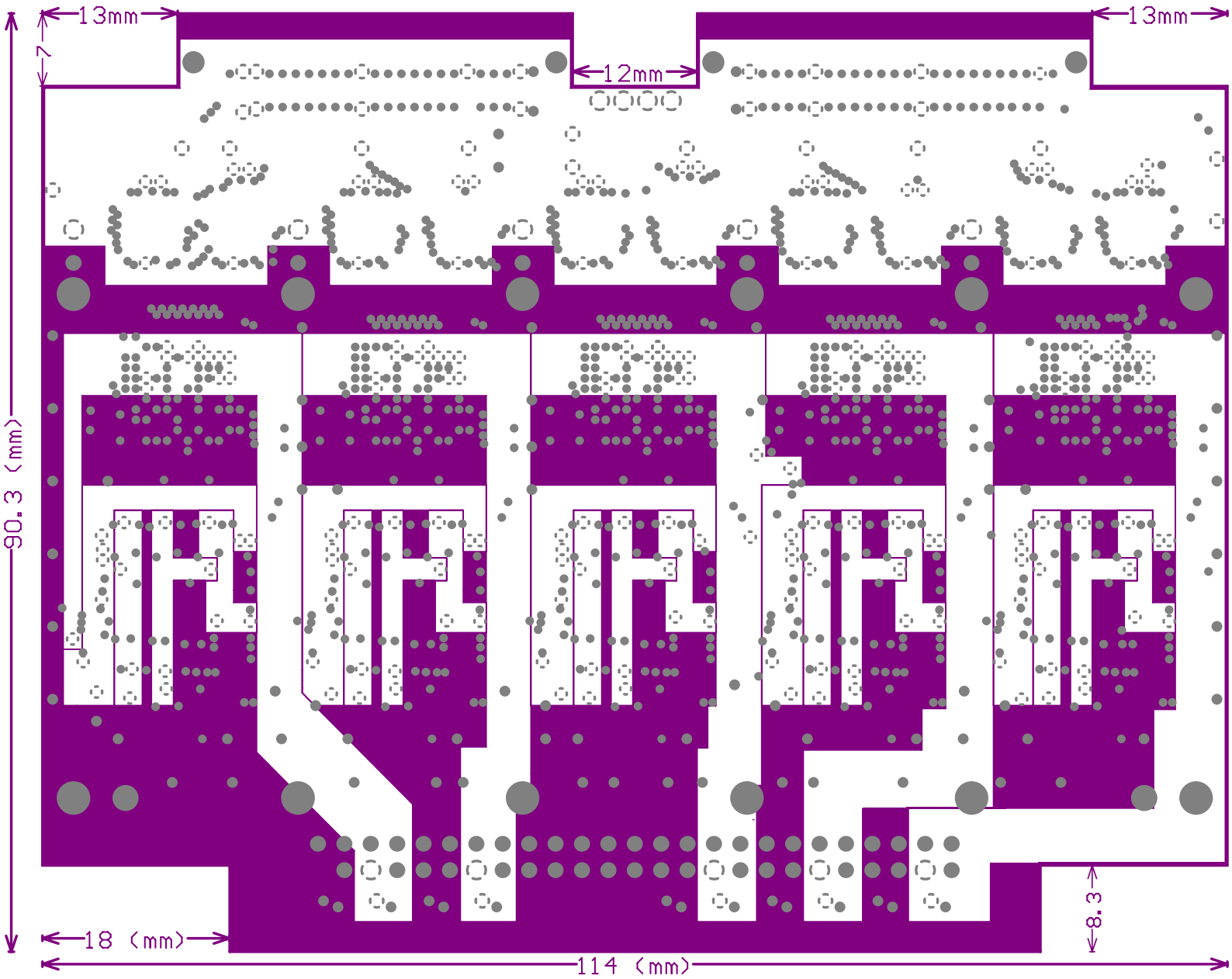
13mm
13mm
7
12mm
90.3 (mm)
18 (mm)
114 (mm)
8.3

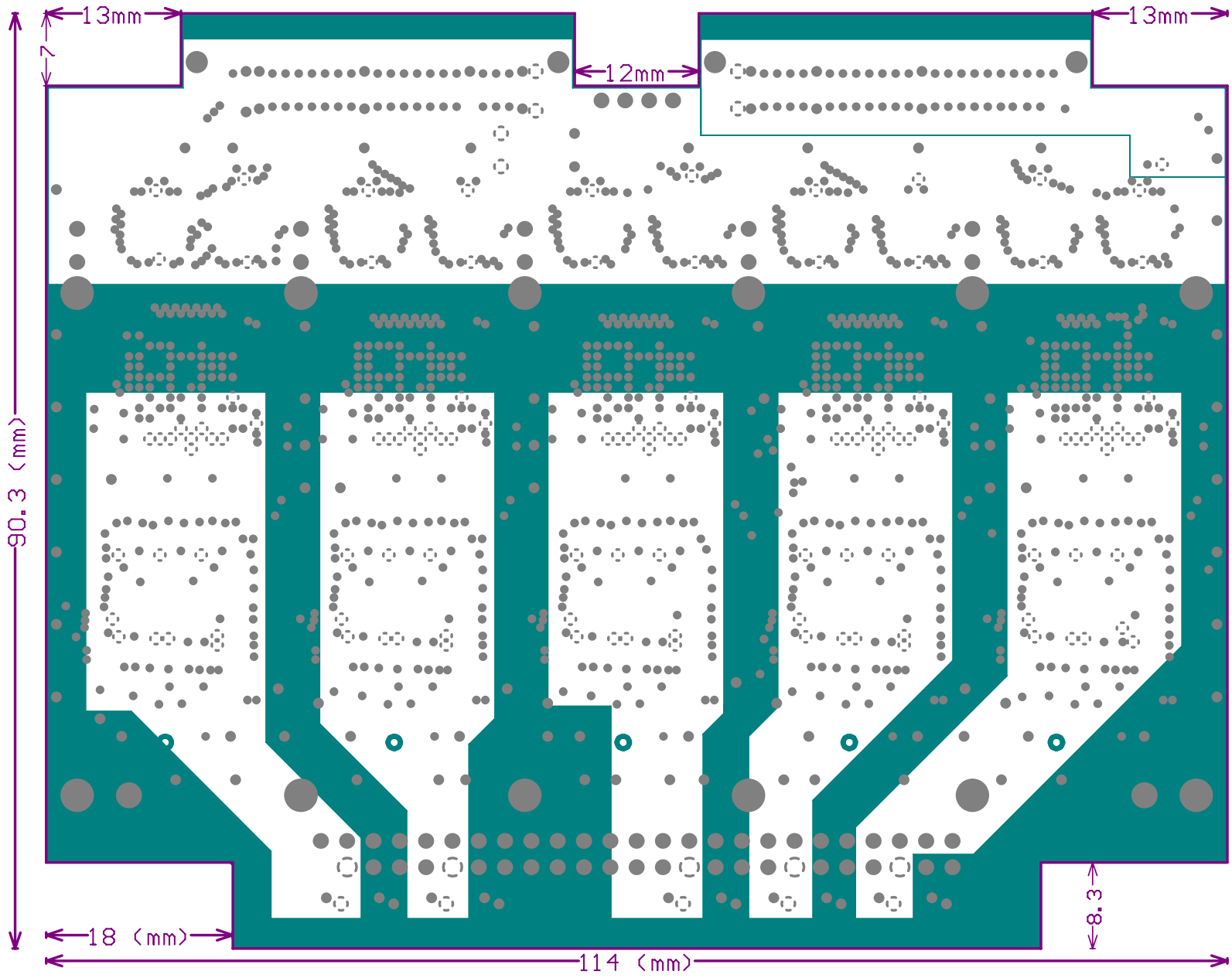
13mm
13mm
7
12mm
90.3 (mm)
8.3
18 (mm)
114 (mm)

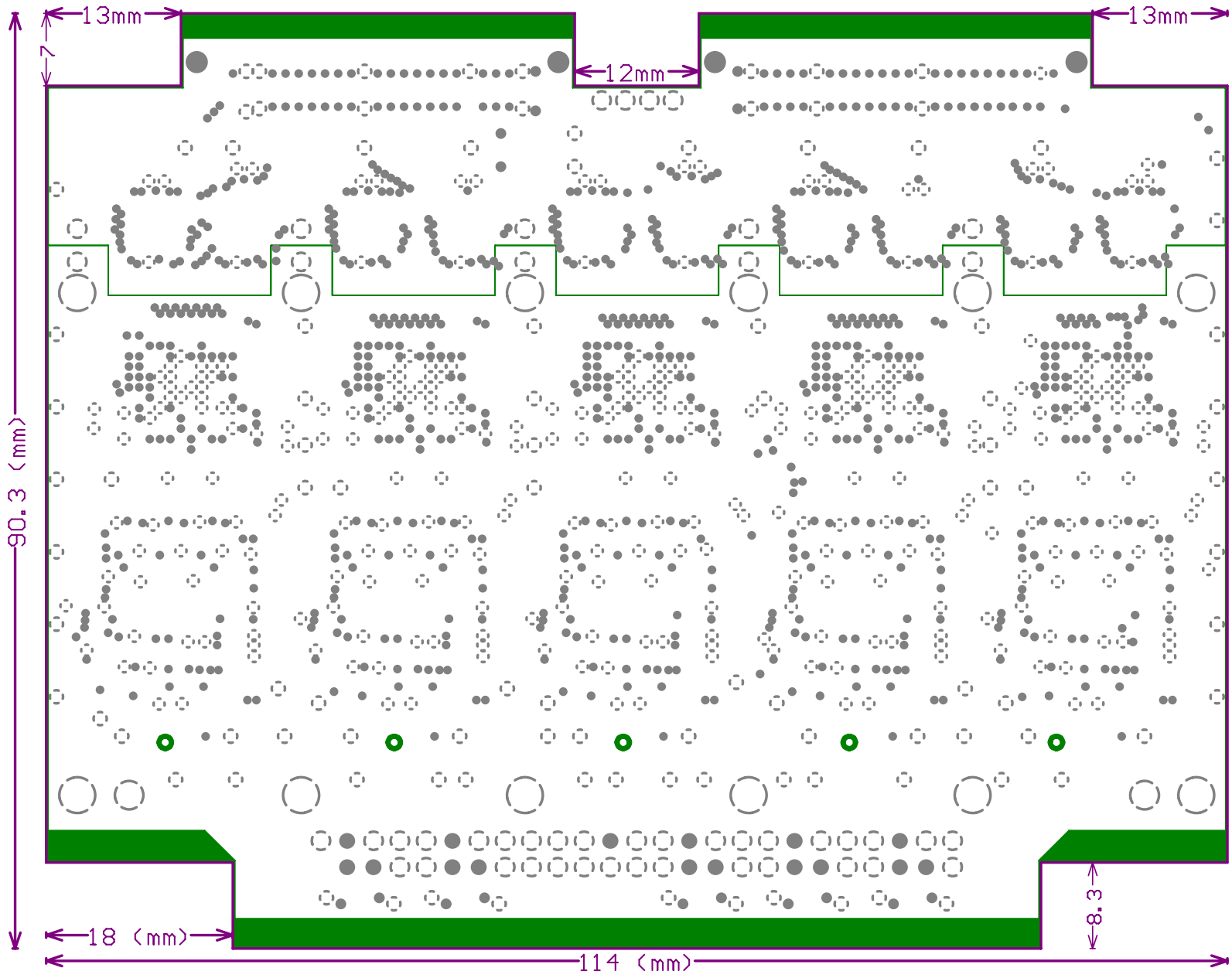
13mm
13mm
7
12mm
90.3 (mm)
8.3
18 (mm)
114 (mm)

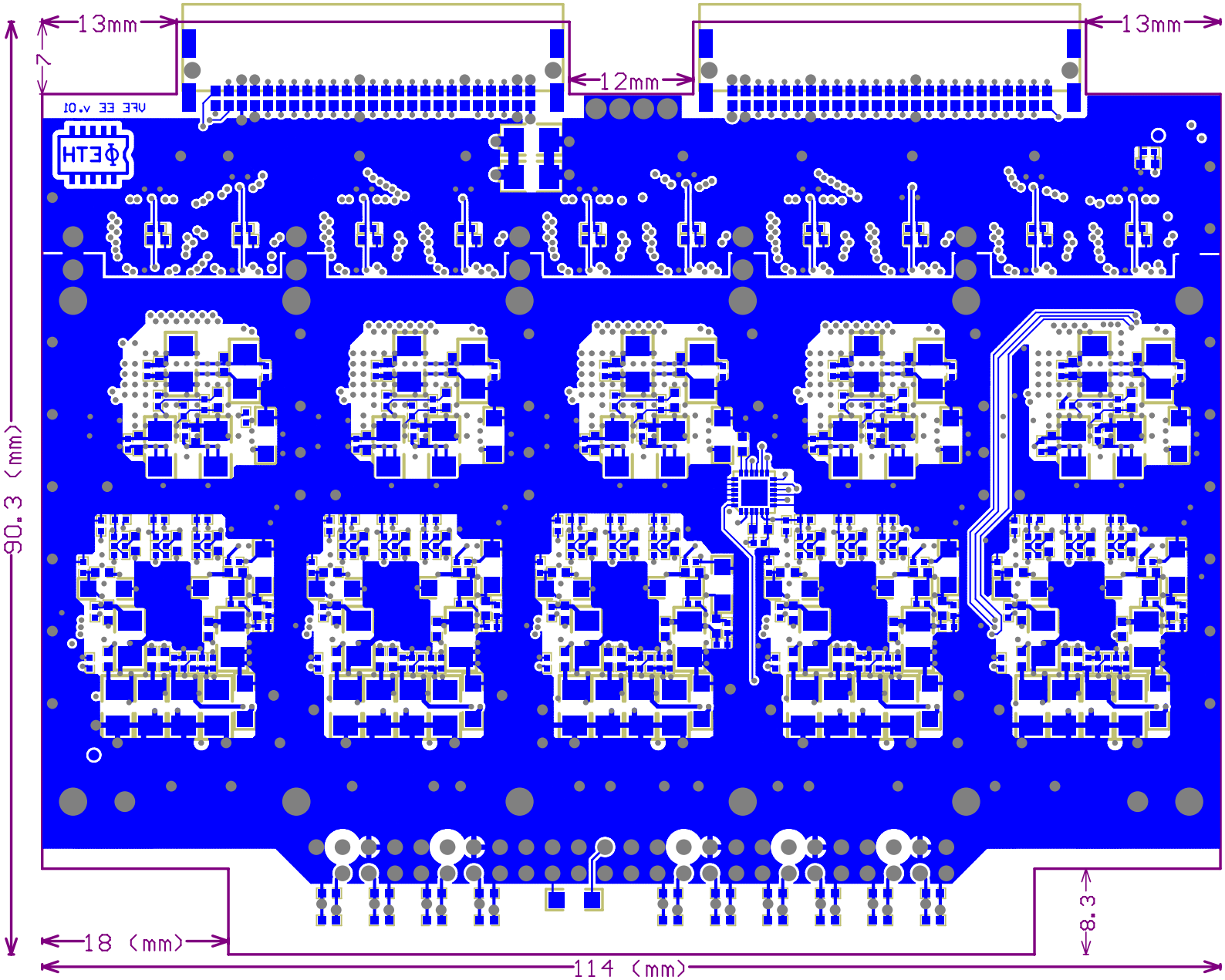
13mm
7
12mm
13mm
90.3 (mm)
18 (mm)
114 (mm)
8.3

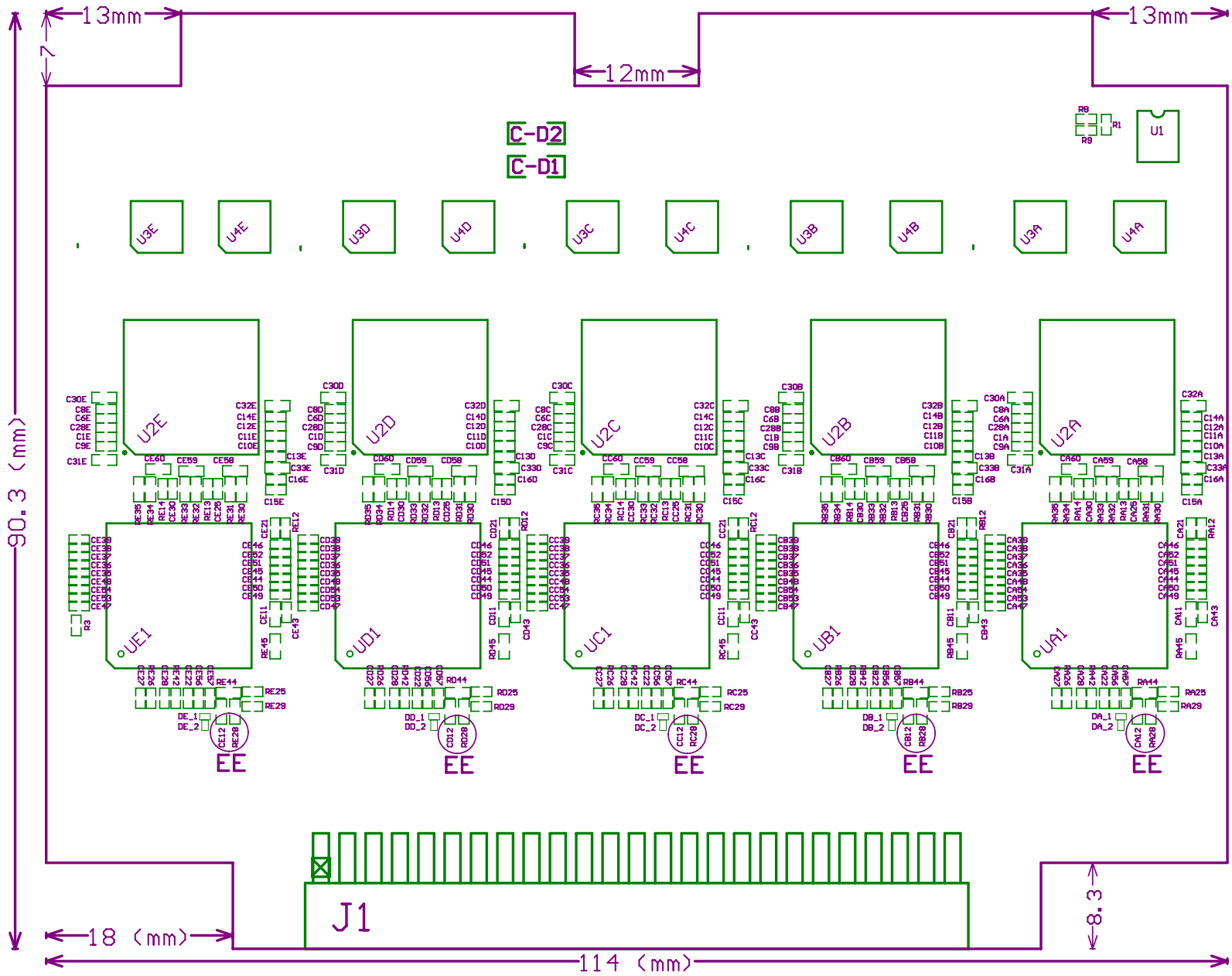
13mm
13mm
7
12mm
90.3 (mm)
C-D2
C-D1
U1
U3E
U4E
U3D
U4D
U3C
U4C
U3B
U4B
U3A
U4A
U2E
U2D
U2C
U2B
U2A
UE1
UD1
UC1
UB1
UA1
EE
EE
EE
EE
EE
J1
18 (mm)
114 (mm)
8.3

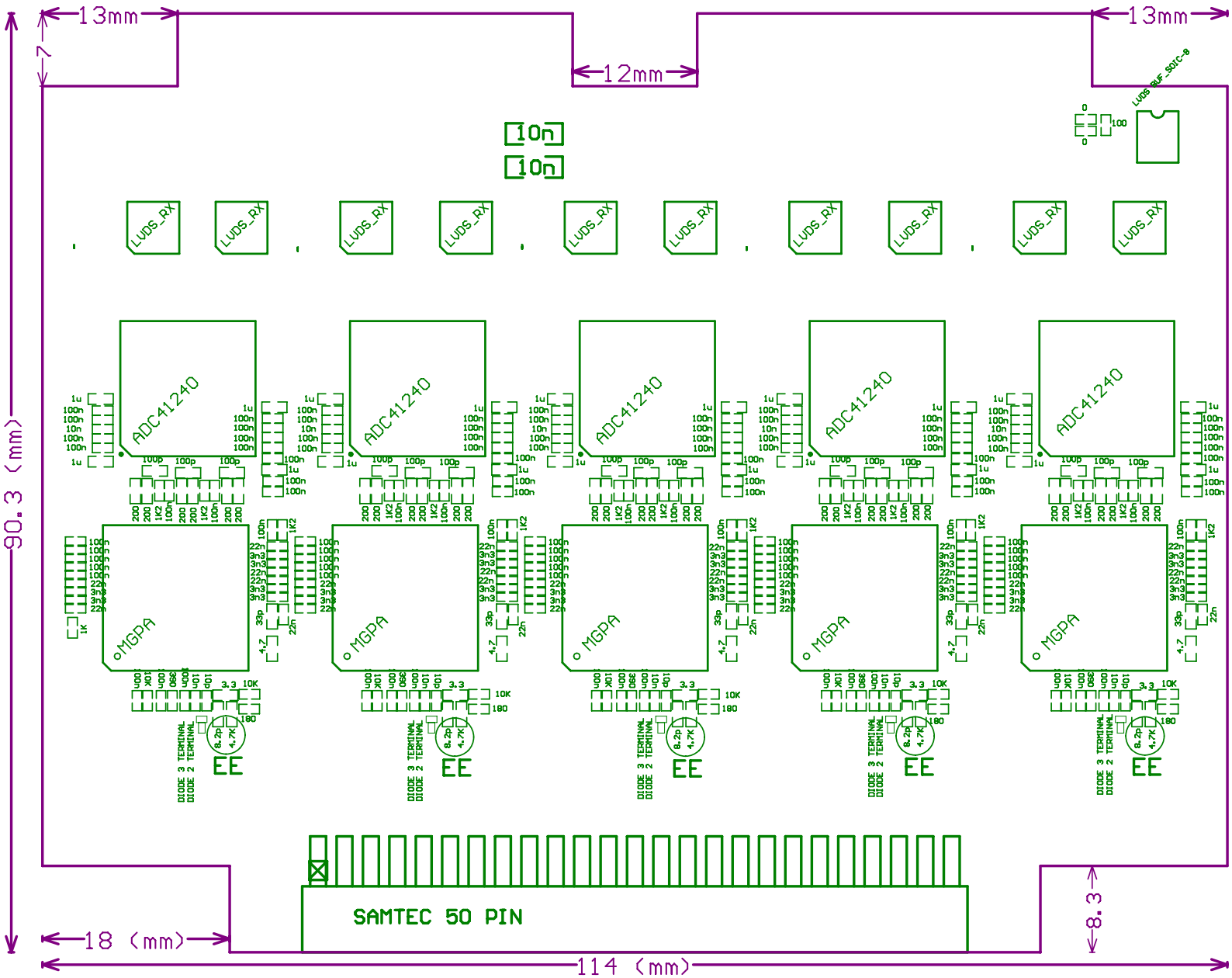
13mm
13mm
7
12mm
90.3 (mm)
10n
10n
LVDS_RX
LVDS_RX
LVDS_RX
LVDS_RX
LVDS_RX
LVDS_RX
LVDS_RX
LVDS_RX
LVDS_RX
LVDS_RX
LVDS_BUF_SOIC-8
ADC41240
ADC41240
ADC41240
ADC41240
ADC41240
MGPA
MGPA
MGPA
MGPA
MGPA
DIODE 3 TERMINAL
DIODE 2 TERMINAL
EE
SAMTEC 50 PIN
8.3
18 (mm)
114 (mm)

13mm
12
12mm
13
13mm
7
90.3 (mm)
C-D6
C-D5
18 (mm)
114 (mm)
8.3

13mm
7
ERNI2X25
12mm
ERNI2X25
13mm
90.3 (mm)
10u
10u
1SK
1u
100n
22u
4u7
10u
33u
1.3k
680
220n
1k
10
430
DC05
162k
18 (mm)
114 (mm)
8.3